UIN 226405, IMAX XTRA 2, 4 BOILER HEADER KIT, 80kW, DN80 PN6 WATER, R2" TO DN65 PN6 GAS, THREADED PUMP
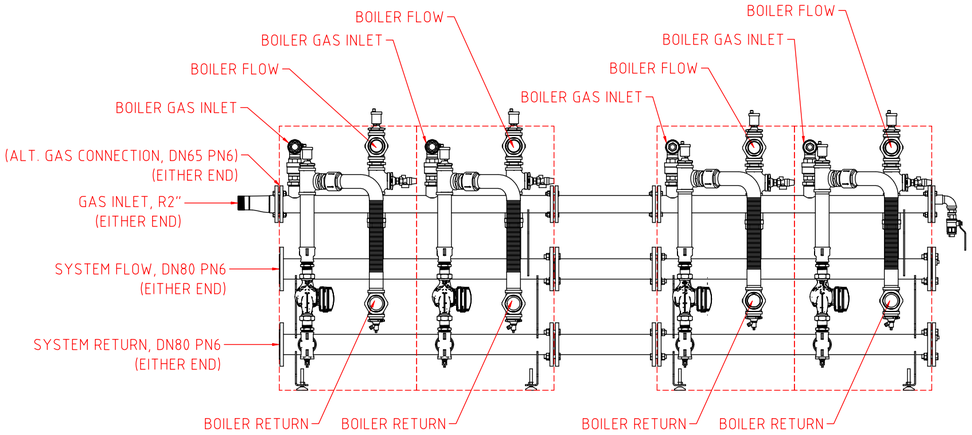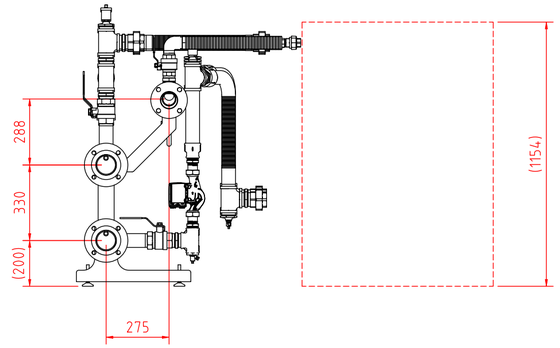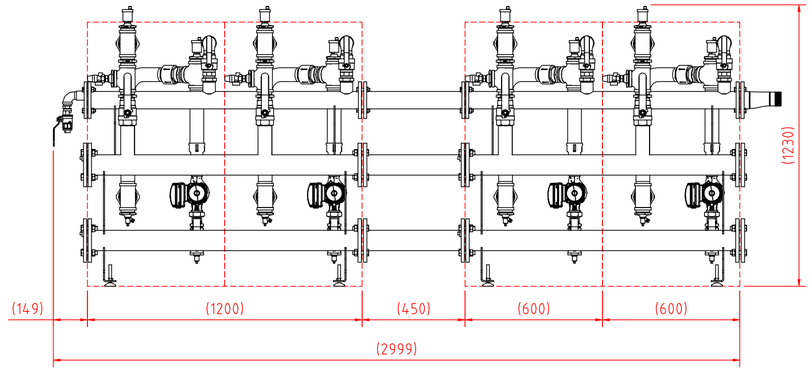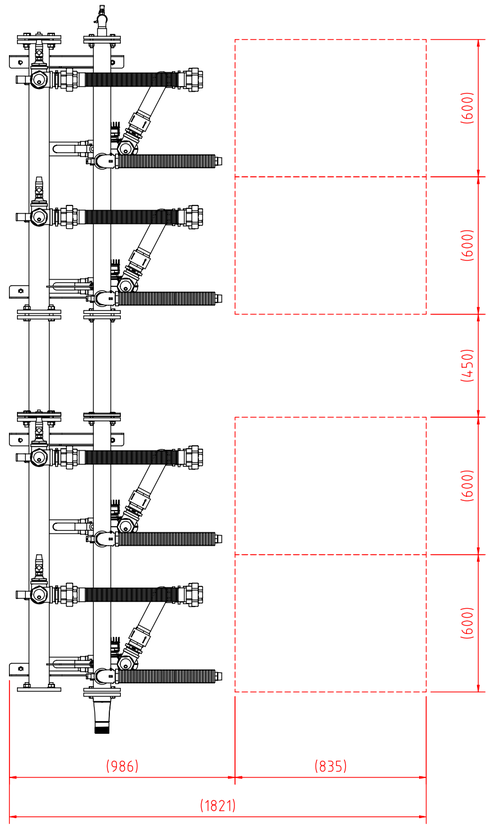
Ideal Heating reserves the right to amend details or specification without notice. If in doubt please contact an authorised representative